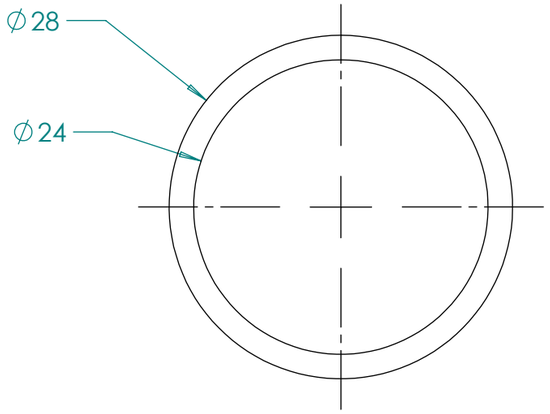

Model No	PT-03220B16MP
Description	12 MP IR CCTV Lens
Focal Length	3.2mm
Aperture	F2.0
Image Format	1/1.7"
Field Of View	D160xH131xV99 Deg
Mount	M12x0.5 (S-Mount)
MOD	0.15m
Back Focal Length	6.14mm
External Dimensions	28x38.9mm
Net Weight	6g
Distortion	TBD

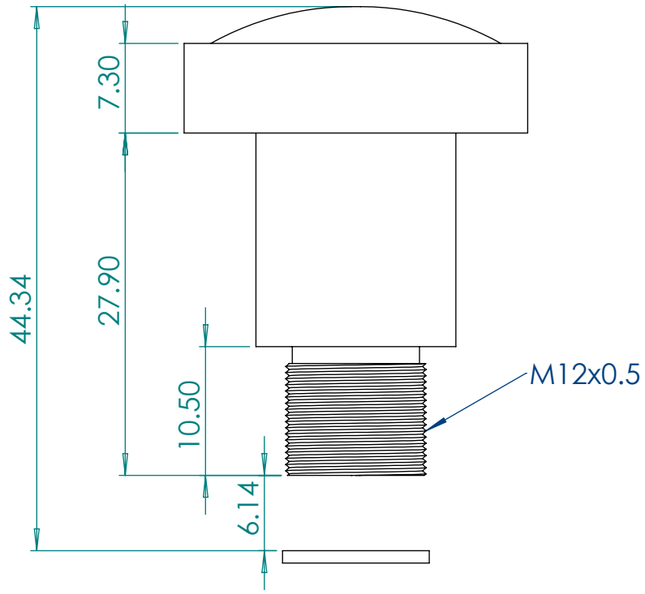

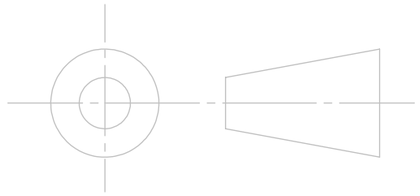

UNLESS OTHERWISE SPECIFIED:
DIMENSIONS ARE IN MILLIMETERS
SURFACE FINISH:
TOLERANCES:
LINEAR:
ANGULAR:

FINISH:

DEBUR AND BREAK SHARP EDGES

DO NOT SCALE DRAWING

REVISION 1.00

M12 LENSES INC.

	NAME	SIGNATURE	DATE
DRAWN	THARAKA G		
CHK'D			
APPV'D			
MFG			
Q.A			

MATERIAL:

WEIGHT:

TITLE:

3.2mm, F2.0 CCTV LENS

DWG NO. PT-03220B12MP

A3

SCALE:2:1

SHEET 1 OF 1